SAER ELETTROPOMPE	Technical data BP 7 B	Revision no	Page: 2

	Receiver	From
Company name		
Respons. Department		
Person in charge		
Phone number		
Fax no		
E-mail address		

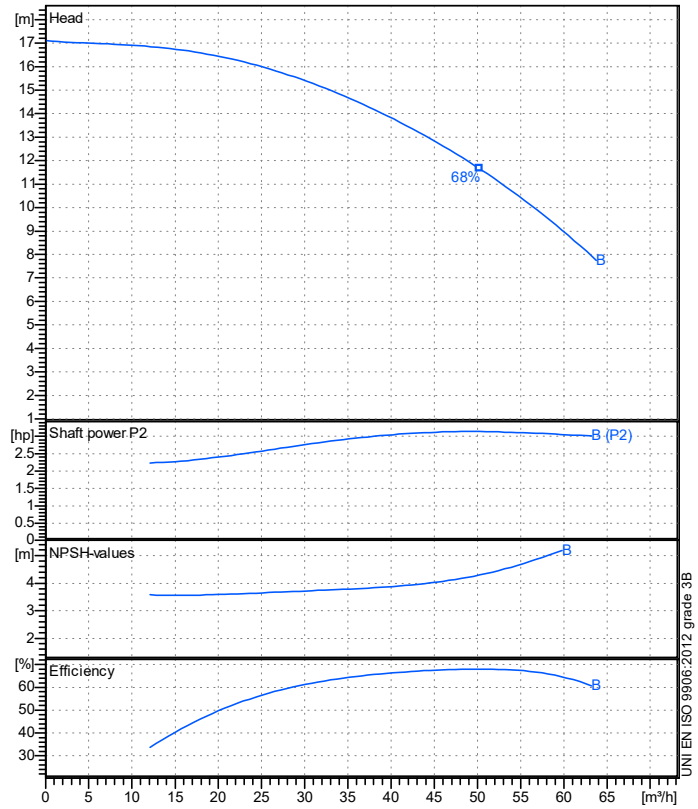

Operating data specification

Nominal flow	m³/h	0
Nominal head	m	0
Static head	m	0
NPSH - value of plant	m	0
Inlet pressure	psi	1.42
Fluid		Water, pure
Operating temperature t A	°C	20
Density at t A	lb/ft³	62.32
Kin. viscosity at t A	ft²/s	1.082E-5

Pump

Pump name			BP 7 B	
Size				
Design				
Speed	rpm	2850	No of stages	1
Impeller type				
Flow	Nominal	m³/h		
	Max-	m³/h	63.7	
	Min-	m³/h	0	
Head	Nominal	m		
	Max-	m	17.1	
	Min-	m	7.75	
Head H(Q=0)		m	17.1	
NPSH 3%		m		
Max. working pressure		psi	24.3	
Shaft power		hp		
Efficiency		%		
Max absorbed power		hp	3.1377	

Materials Pump

Shaft	Stainless steel AISI 431 (1.4057)
Impeller	Carbon steel G20Mn5 (1.6620)
Pump body	Cast iron EN-GJL-200
Support	Cast iron EN-GJL-200
OR	NBR Rubber
Mechanical seal	Q1VEG (SiC/AlO/EPDM)

Motor		Frame size	90 L	
Manufacturer / Type		SAER 90 L 2 - 2,2 3~		
Rated power	hp	2.9502	Efficiency 4/4	0 %
Electric current	A	5.6 A	Speed rpm	2950
Electric voltage	V	400 V	3~ Hz	50
Starting mode		Unknown		
Degree of protection		IP 44	Insulation class	F

Dimensions in mm

a	80
DNA	G 3"
DNM	G 3"
f	345
h1	130
h2	190
n1	240
n2	190
ød	14
w	70

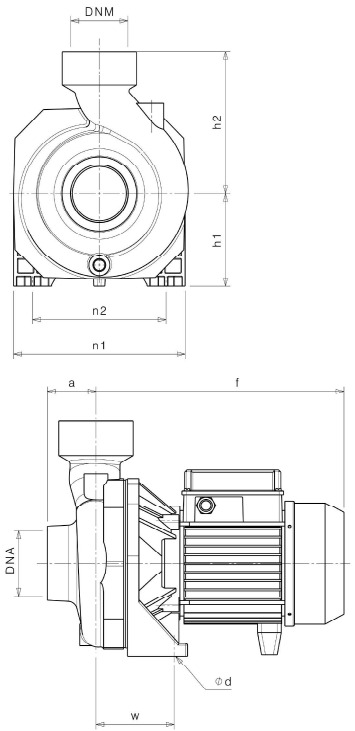

Remarks:

Project	Project ID	Created by	Created on	Last update
			2021-05-18	